Clip

PART #: A00-C343A-00134

KEY FEATURES

- 3.40 L x 1.40W x 1.40H mm
- Side contact
- Side protected

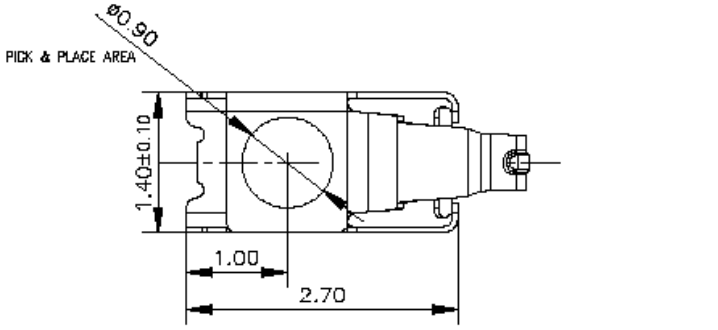

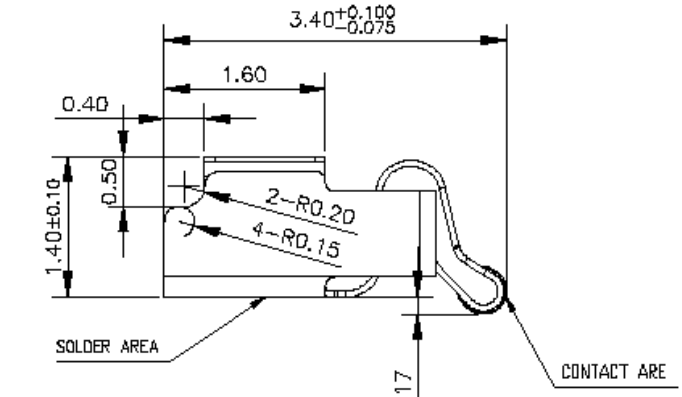

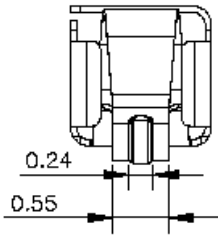

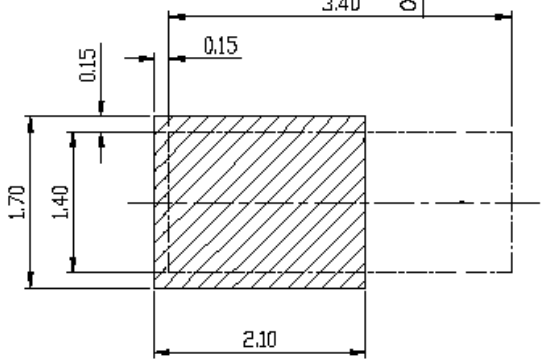

PCB AREA CLIP AREA

REFERENCE PCB LAYOUT

TOLERANCE ±0.05